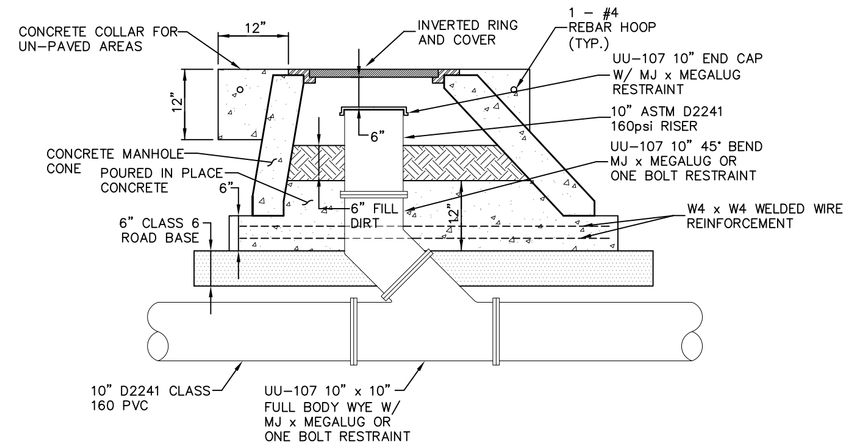

PROFILE VIEW
CLEAN OUT DETAIL
FOR 10" IRRIGATION LINE (466D)

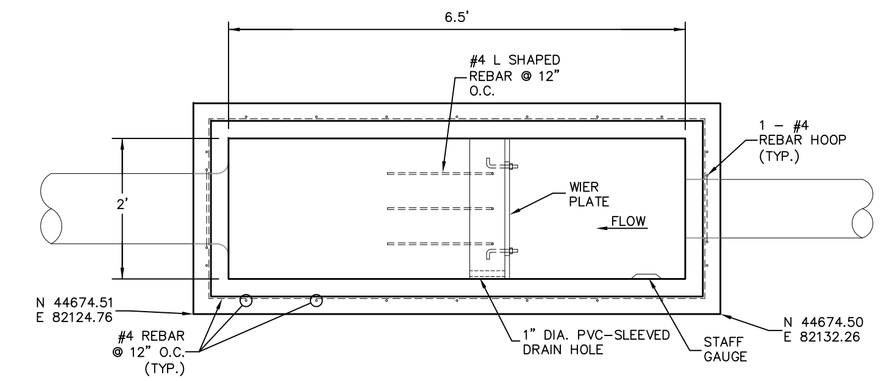

PLAN VIEW
IRRIGATION CONTROL STRUCTURE (299B)
SCHLOTZSKY'S DELI PROPERTY

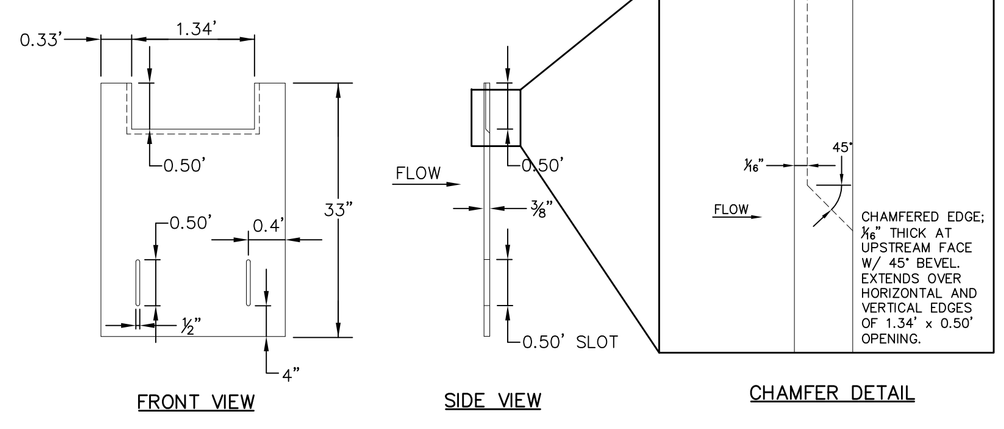

WEIR PLATE DETAIL
SCHLOTZSKY'S DELI PROPERTY

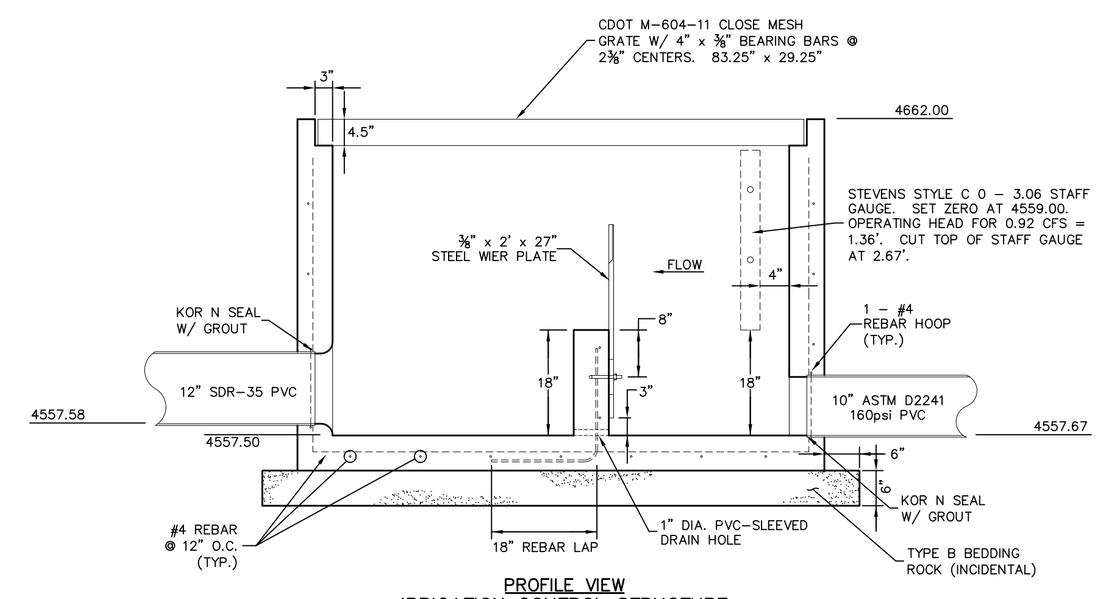

PROFILE VIEW
IRRIGATION CONTROL STRUCTURE
SCHLOTZSKY'S DELI PROPERTY

DESCRIPTION	DATE
REVISION 1	
REVISION 2	
REVISION 3	
REVISION 4	

DRAWN BY JAH DATE 10/2007
DESIGNED BY DD DATE 10/2007
CHECKED BY DATE
APPROVED BY DATE

SCALE: NTS

CITY OF Grand Junction COLORADO

PUBLIC WORKS AND UTILITIES ENGINEERING DIVISION

RANCHMEN'S DITCH FLOOD CONTROL IRRIGATION STRUCTURE DETAILS

IR-11

N:\Land\Proj\F31800\Ducmann Ditch Diversion v2.0\dwg\Construction Drawings\Phase 2\08 IRRIGATION DETAILS-6-25-2008.dwg, PLAN, 6/26/2008 2:21:23 PM